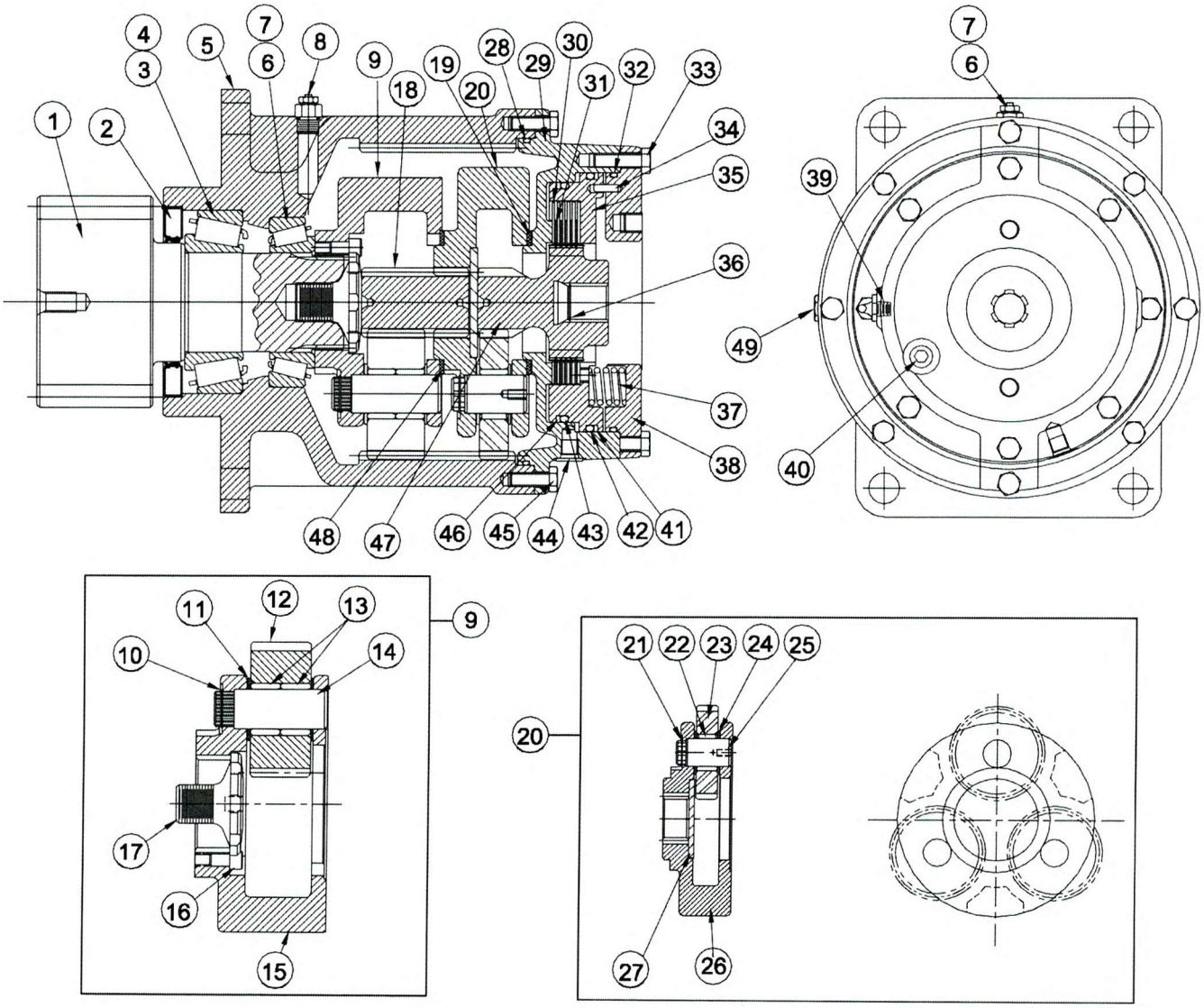


12168

(SHEET 1 OF 1)